(2 pts) Name:

AME 3623: Embedded Real-Time Systems: Final Exam

May 5, 2008

- This examination booklet has 17 pages.
- Do not forget to write your name at the top of the page and to sign your name below.
- The exam is closed book, closed notes, and closed electronic device. The exception is that you may have one page of your own notes.
- The exam is worth a total of 200 points (and 20% of your final grade).
- Explain your answers clearly and be concise. Do not write long essays (even if there is a lot of open space on the page). A question worth 5 points is only worth an answer that is at most 1.5 sentences.
- You have 2 hours to complete the exam. Be a smart test taker: if you get stuck on one problem go on to the next. Don't waste your time giving details that the question does not request. Points will be taken off for answers containing extraneous information.
- Show your work. Partial credit is possible, but only if you show intermediate steps.

Problem	Topic	Max	Grade
0	Name	2	
1	Interrupts and I/O	51	
2	Finite State Machines	20	
3	Sequential Logic	27	
4	Analog Processing	25	
5	Microprocessor Design	32	
6	Device Control	25	
7	Logic	20	
Total		202	

On my honor, I affirm that I have neither given nor received inappropriate aid in the completion of this exam.

Signature: _____

Date: _____

1. **Interrupts and I/O** (51 pts)

(a) (15 pts) Below is an interrupt service routine that is supposed to produce a signal of a fixed frequency but a variable duty cycle on port C, pin 4 (counting from 0). However, there exist several bugs (errors). Make the necessary changes to this code to remove these bugs. The number of counts for which the output signal should be "1" is specified by the variable **duration**. You may assume that the I/O hardware has been initialized correctly.

```
volatile uint8_t counter;
volatile uint8_t duration;

ISR(TIMER0_OVF_vect) {

  ++counter;

  if(counter <= duration) {

     PORTC &= ~4;

  }else if(counter == 0){

     PORTC ^= 4;

  }
}
```

(b) (5 pts) Assume that the code above has been corrected. Given a prescaler of 256 and $duration = 20$, what is the resulting interrupt frequency? (set up the fraction, but do not reduce it)

(c) (5 pts) What is the frequency of the signal produced on the PORTC output pin? (again, set up the fraction, but do not reduce it)

(d) (5 pts) What is the duration of the "high" period of the signal (what is the length of time that the output pin is set to a state of "1")? (again, set up the fraction, but do not reduce it)

Consider a circular buffer of size $N = 8$ memory elements (values shown below) and state variables $front = 5$ and $nchars = 3$.

index	**value**
0	't'
1	'i'
2	'c'
3	'k'
4	'z'
5	'c'
6	'o'
7	'm'

(e) (8 pts) Assume that four more characters arrive on the serial port: 'p', 'a', 's', 's'. Show the state of the buffer and the associated variables after these four characters have been added to the buffer.

index	**value**
0	
1	
2	
3	
4	
5	
6	
7	

$front =$

$nchars =$

(f) (8 pts) Assume that four characters are read from the buffer. What are the characters (in order)? Also - show the state of the buffer and the associated variables after these four characters have been read from the buffer.

Characters:

index	**value**
0	
1	
2	
3	
4	
5	
6	
7	

$front =$

$nchars =$

(g) (5 pts) In asynchronous serial communication (the type of serial communication that we studied in class), how do the sender and receiver agree on when the first bit is being transmitted? (be brief)

2. **Finite State Machines** (20 pts)

Consider the following robot world in which the mobile robot is facing to the right.

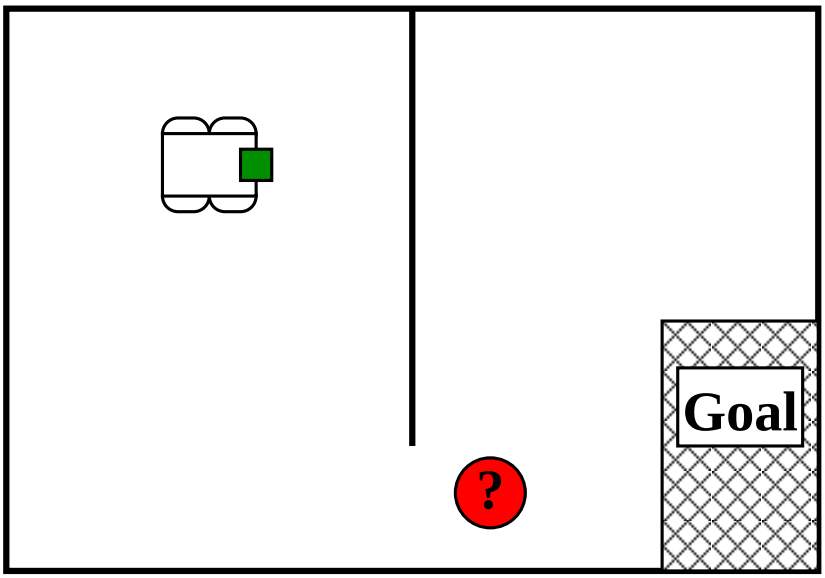

The robot is able to move forward, turn left or right by 90 degrees, stop, and grasp. The robot is equipped with sensors that tell it when it has bumped into a wall or the ball, and when a turn or a grasp operation has completed.

Your task will be to design a finite state machine that takes the robot from its current position to the goal location. If the robot runs into the ball along the way, it should also grasp it and carry it to the goal.

(a) (5 pts) What are the FSM events?

(b) (5 pts) What are the FSM actions?

(c) (10 pts) Draw the finite state machine diagram that will control the robot through this sequence. Note that your FSM should perform properly whether the ball is present or not.

3. **Sequential Logic** (27 pts)

Consider the following circuit:

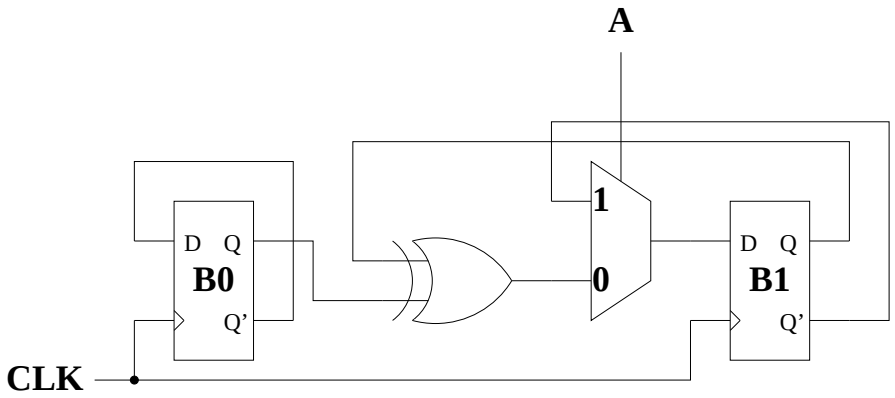

(a) (6 pts) Assume that the initial state is $B1 = 1$ and $B0 = 1$, and that $A = 1$. Fill in the following timing diagram:

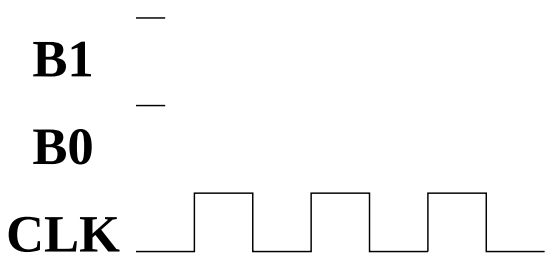

(b) (5 pts) What mathematical operation does this circuit perform on the binary number $B1$, $B0$ when $A = 1$?

(c) (5 pts) Define a set of states as all possible combinations of the B_i's: 00, 01, 10, 11. From a finite state machine perspective, what are the two events expressed by this circuit?

(d) (11 pts) Draw a finite state machine diagram that shows the transitions from each state to the next for both of these events (note that some transitions are already given). Only specify the event for each transition (and not the actions).

B1 B0

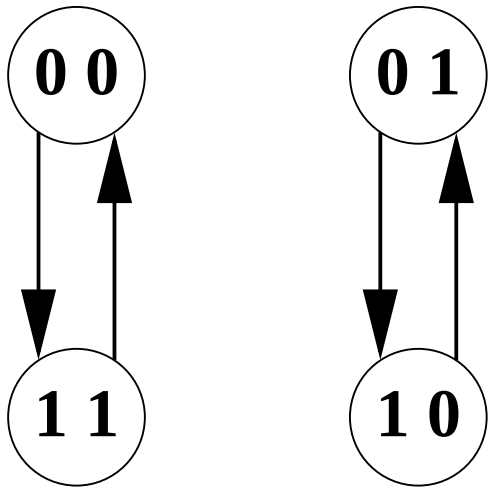

4. **Analog Processing** (25 pts)

Consider the following circuit:

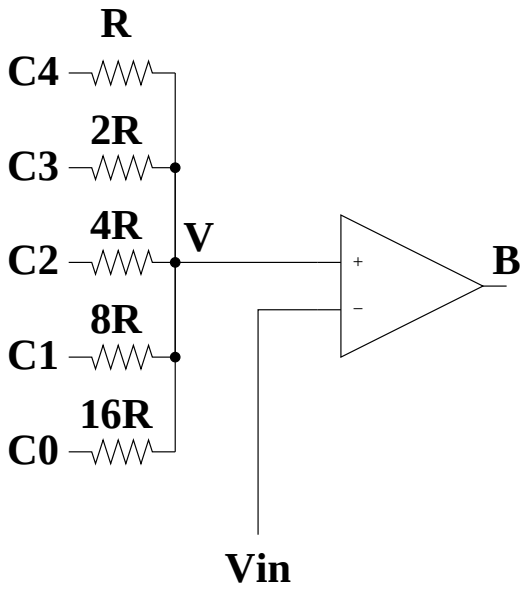

(a) (15 pts) Derive the expression for V in terms of binary digits $C0$ to $C4$. Note that when $C_i = 0$, the voltage on the line is 0 Volts and when $C_i = 1$, the voltage is +5 Volts.

$V = \frac{5}{31}(\quad C_0 + \qquad\qquad\qquad\qquad\qquad\qquad\qquad\qquad\qquad\qquad\qquad\qquad)$

Assume that the operational amplifier is configured such that if $V > V_{in}$, then $B = 1$; otherwise, $B = 0$.

(b) (10 pts) Given that $V_{in} = 63/31$ Volts, show each step in the *successive approximation* algorithm (in particular, show the C's, V, and B).

C_4	C_3	C_2	C_1	C_0	V	B

5. **Microprocessor Design** (32 pts)

(a) (5 pts) Assume a memory chip that can store a total of 64 bytes and that the data bus is 8-bits wide. How many address lines are required to address these memory elements?

(b) (8 pts) List two properties of a bus.

(c) (5 pts) (True/False) In the Atmel Mega8, DDRB is a special purpose register. Explain.

(d) (5 pts) Briefly state the function of a *program counter.*

(e) (9 pts) What is the value of variable *baz* at the end of this segment of code (in hexadecimal)?

```
foo = 0x12;

bar = 0x31;

baz = foo | bar & 0x91;
```

6. **Device Control** (25 pts)

Given the following H-bridge circuit:

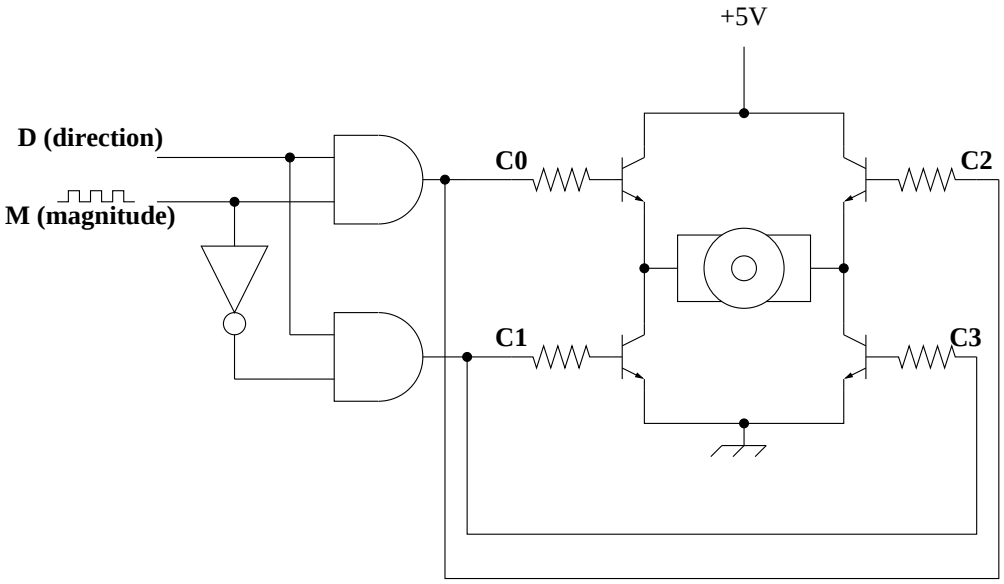

D is a directional input that is intended to specify the direction of motor torque.

M is a Pulse Width Modulated signal that is intended to specify the magnitude of the torque signal (the higher the duty cycle, the higher the torque).

(a) (10 pts) For the given circuit, what is the truth table for C_0, C_1, C_2, and C_3 as a function of D and M?

D	M	C_0	C_1	C_2	C_3
0	0				
0	1				
1	0				
1	1				

(b) (5 pts) Briefly describe what happens to the circuit when $D = 1$ and $M = 1$.

(c) (10 pts) The circuit has two bugs. What are they and how do you fix them?

7. **Logic** (20 pts)

Given the following truth table:

A	B	C	f
0	0	0	1
0	0	1	0
0	1	0	0
0	1	1	0
1	0	0	1
1	0	1	0
1	1	0	1
1	1	1	1

(a) (5 pts) Give the "minterm" form of the corresponding algebraic expression.

(b) (10 pts) Derive a simplified algebraic description for f. Justify each step (provide the name of the rule that you are using).

(c) (5 pts) Draw the corresponding circuit.