Embedded Real-Time Systems (AME 3623)
Homework 2

February 6, 2008

This homework assignment is due on Thursday, February 14th at 5:00pm. Your work may be handed in electronically (use the **Homework 2** digital dropbox on D2L) or in hardcopy form (in person or in office).

This assignment must be done individually: do not share/discuss your answers with others or look at the answers of others.

Question 1

1. (5pts) Given the binary number: 101101000. What is the decimal equivalent? What is the hexadecimal equivalent? Show your work.

2. (5pts) Given the binary number: 11101110. What is the decimal equivalent? What is the hexadecimal equivalent? Show your work.

3. (5pts) Given the decimal number: 419. What is the binary equivalent? Show your work (all of the steps of the algorithm that we discussed in class).

4. (5pts) Given the decimal number: 524. What is the binary equivalent? Show your work.

Question 2

Consider the following circuit with input CLK:

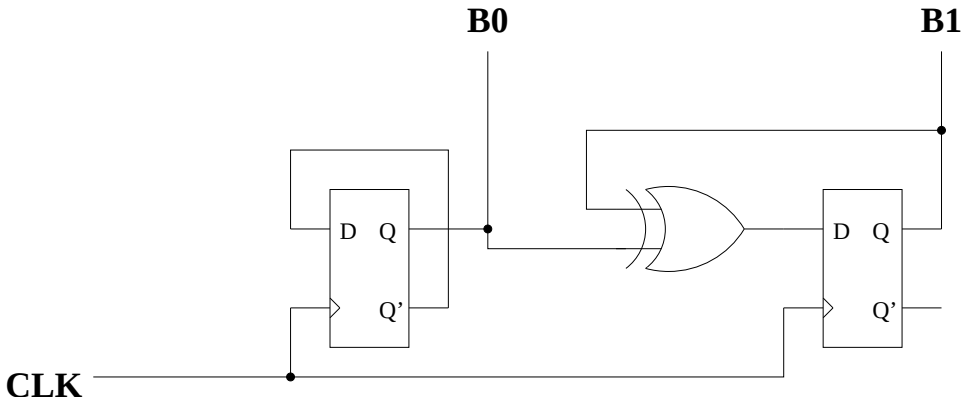

1. (10pts) Assume that the initial state is: $B0 = 0$ and $B1 = 0$. Show the timing diagram for $B0$ and $B1$ as the clock (CLK) is pulsed.

2. (10pts) Interpreting $B1$, $B0$ as a 2-bit binary number (with $B0$ as the 1's digit), what is the sequence of values that this circuit produces?

3. (10pts) What is the function of this circuit?

Question 3

Consider the following circuit with inputs CLK and X:

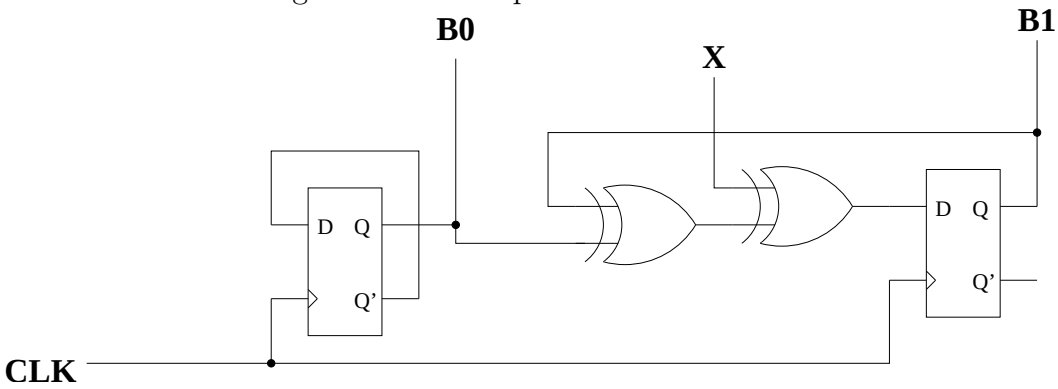

1. (10pts) Assume that the initial state is: $B0 = 0$ and $B1 = 0$. Assume also that $X = 0$. Show the timing diagram for $B0$ and $B1$ as the clock (CLK) is pulsed.

2. (10pts) Interpreting $B1$, $B0$ as a 2-bit binary number (with $B0$ as the 1's digit), what is the sequence of values that this circuit produces?

3. (10pts) What is the function of this circuit when $X = 0$?

4. (10pts) Assume the same initial state as above, and assume that $X = 1$. Show the timing diagram for $B0$ and $B1$ as the clock (CLK) is pulsed.

5. (10pts) What is the sequence of values that this circuit produces?

6. (10pts) What is the function of this circuit when $X = 1$?

Question 4

How much time did you spend on this homework assignment?