(2 pts) Name:

AME 3623: Embedded Real-Time Systems: Final Exam

May 6, 2013

- This examination booklet has 17 pages.
- Write your name at the top of this page and sign your name below.
- The exam is closed book, closed notes, and closed electronic device. The exception is that you may have one page of your own notes.
- The exam is worth a total of 200 points (and 20% of your final grade).
- Explain your answers clearly and be concise. Do not write long essays (even if there is a lot of open space on the page). A question worth 5 points is only worth an answer that is at most 1.5 sentences.
- You have 2 hours to complete the exam. Be a smart test taker: if you get stuck on one problem go on to the next. Don't waste your time giving details that the question does not request. Points will be taken off for answers containing extraneous information.
- Show your work. Partial credit is possible, but only if you show intermediate steps.

Problem	Topic	Max	Grade
0	Name	2	
1	Interrupt Service Routines and Digital I/O	25	
2	Number Representation and Arithmetic	20	
3	Finite State Machines	50	
4	Analog Processing	40	
5	Analog Circuits	20	
6	Microprocessors	20	
7	Serial Communication	25	
Total		202	

On my honor, I affirm that I have neither given nor received inappropriate aid in the completion of this exam.

Signature: _____

Date: _____

1. **Interrupt Service Routines and Digital I/O** (25 pts)

Carefully consider the following circuit:

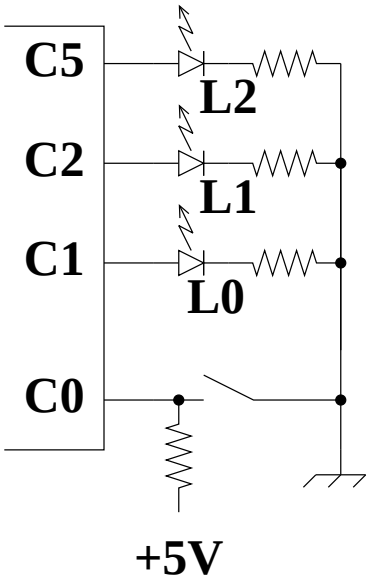

And consider the following program:

```
ISR(TIMER2_OVF_vect) {
  static uint8_t counter = 0;

  PORTC = PORTC & ~0x26 | counter << 4;
  counter += 1;
}

int main(void) {
  DDRC = 0x26;
  PORTC = 0;
  timer2_config(TIMER2_PRE_32);
  timer2_enable();
  sei();

  while(1) {
  }
}
```

(a) (5 pts) Assuming a system clock of $16MHz$, at what frequency is the timer 2 counter incrementing? (give the ratio with units)

(b) (5 pts) At what frequency is the timer 2 overflow interrupt being generated? (give the ratio with units)

(c) (5 pts) What is the sequence of values that *counter* takes on for the first 6 interrupts?

(d) (10 pts) Show the state of LEDs 0, 1, 2 as a function of interrupt number for interrupts 1 through 6.

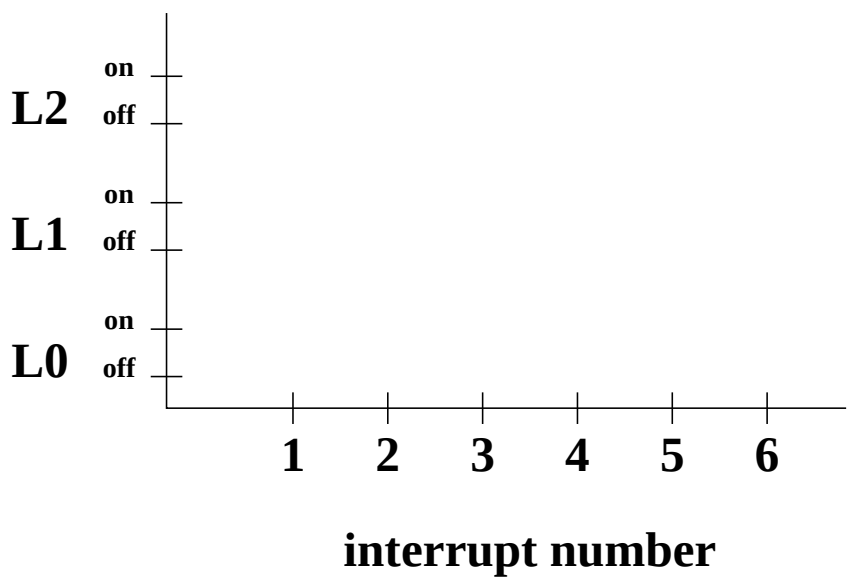

2. **Number Representation and Arithmetic** (20 pts)

(a) (5 pts) What is the decimal equivalent of hexadecimal 87? Show your work.

(b) (5 pts) Take the two's complement (the negative) of hexadecimal 87 (assume an 16-bit, signed representation). Show your work.

(c) (5 pts) Compute $24 - 0x1b$ using binary arithmetic. Show your work and give your answer in 8-bit binary two's complement.

(d) (5 pts) What is the decimal equivalent of the above result?

3. **Finite State Machines and Control** (50 pts)

Consider a helicopter whose state can be described with two variables: height and yaw (x, y, roll and pitch are **not** part of the state). One proportional-derivative controller is used for each to produce the appropriate control signals to close the gap between the desired and actual state. On top of these PD controllers is a Finite State Machine controller (pictured below). This controller has access to the following actions:

- HG = xxx cm. Set the height goal to xxx. You may assume that the underlying PD controller will eventually bring the height to the currently set goal.
- YG = yyy deg. Set the yaw goal to yyy. The associated PD controller will eventually bring the true yaw to the yaw goal.
- Z. Do nothing

The FSM also has the following events:

- HGC. Height goal complete. The helicopter has reached its height goal.
- YGC. Yaw goal complete.
- C = bb. A control input that can be one of four different values: 00, 01, 10 or 11 (so, 4 different events). This control input is set by some remote pilot.

The FSM is as follows:

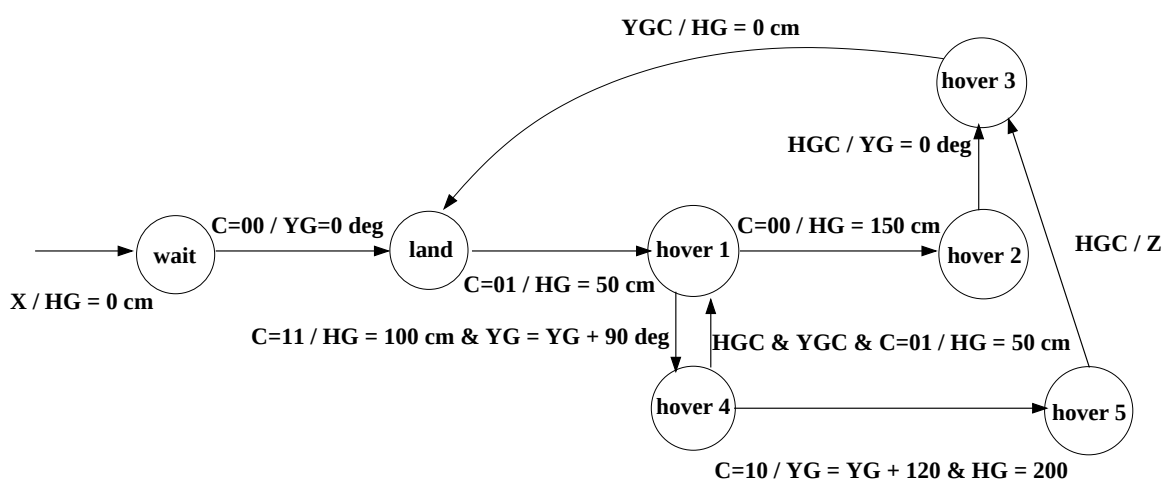

(a) (5 pts) Starting from the *wait* state, assume that the following commands are issued in this order: 00, 01, 11, 10. What is the state that the FSM stops in?

(b) (5 pts) What is the orientation of the heli at this state?

(c) (5 pts) What is the maximum height obtained by the heli during the sequence?

(d) (5 pts) Starting from the *wait* state, assume that the following sequence of commands is issued: 00, 01, 11, 01. What is the state that the FSM stops in?

(e) (5 pts) What is the orientation of the heli at this state?

(f) (5 pts) What is the maximum height obtained by the heli during the sequence?

Consider the problem of a robot dribbling a ball down a soccer field until it reaches the far end of the field (we will call this *the goal*). The robot is equipped with a camera that will automatically move to follow the ball if it sees it. We will design a FSM that performs the high level control for this robot.

The actions are as follows:

- Search ball (SEARCH). This is a generic action that takes a variety of strategies to find the ball (and will ultimately succeed)
- Move toward location behind ball (BEHIND): the robot drives toward a position so that the ball is between the robot and the goal (but not necessarily near the ball)
- Approach ball (APPROACH): the robot drives directly to the ball
- KICK. (immediately after a kick, a GOAL event will occur if a goal is achieved)
- CELEBRATE

The events are:

- FOUND: the camera sees the ball
- NOT_FOUND: the camera does not see the ball
- NEAR: the ball is very close to the robot (and kickable)
- GOAL: the ball is at the goal
- NOT_GOAL: the ball is not at the goal
- LINED_UP: the ball is between the robot and the goal

Note: Although the camera will move to try to keep the ball in view, it can lose visual track of the ball. The FSM must take this into account by initiating a new search.

(g) (20 pts) Draw the FSM that will result in the ball arriving at the goal (and the robot celebrating this fact)

4. **Analog Processing** (40 pts)

Consider the following circuit:

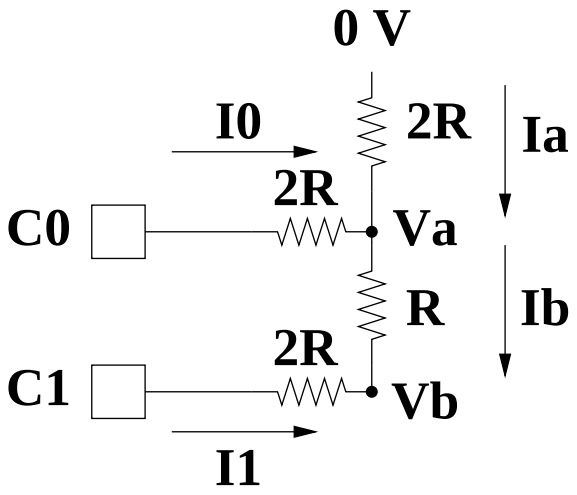

C_1 and C_0 are logical values determined by your Atmel Mega processor (i.e., 0 and 1). The voltage at pin i is $5C_i$. These are considered known variables for the following analysis.

(a) (5 pts) What two equations are always true according to Kirchoff's Current Law? Label them **A** and **B**

(b) (5 pts) What remaining equations are always true?

(c) (10 pts) Given equation **A**, derive a simplified equation that contains only Va, Vb and known variables. Show your work.

(d) (10 pts) Given equation **B**, derive a simplified equation that contains only Va, Vb and known variables. Show your work.

(e) (10 pts) Solve for Vb given only known variables.

5. **Analog Circuits** (20 pts)

Given the following circuit:

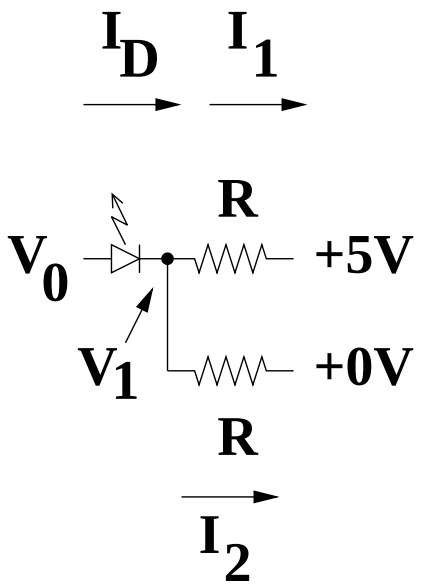

Assume that $R = 1000\Omega$ and $V_f = 2V$.

(a) (5 pts) What are the equations that are always true?

(b) (10 pts) Assume $V_0 = 4V$. What is V_1?

(c) (5 pts) True or False and briefly explain. A Pulse Width Modulated signal **IS** an analog signal.

6. **Microprocessors** (20 pts)

(a) (5 pts) Briefly explain why our programs are stored in the EEPROM of the microcontroller.

(b) (5 pts) True or False and briefly explain. The instruction decoder "tells" the ALU which mathematical operation to perform.

(c) (5 pts) True or False and briefly explain. The ALU stores the results of its computation in the RAM.

(d) (5 pts) True or False and briefly explain. The program counter increments (adds one) at each clock cycle.

7. **Serial Communication** (25 pts)

(a) (15 pts) The code below is taken from our implementation of get_dec(), which takes in a sequence of decimal digits from the serial port and returns the corresponding integer value. Make the necessary changes to this function so that it instead interprets the serial input as a sequence of hexadecimal digits. For example, the sequence of characters '1', 'B', '\n' will result in the return of a decimal value of 27; the sequence of characters 'a', '0', '\n' will result in a return value of 160.

```
uint32_t get_hex(){
  char c;   // Last character read

  uint32_t val = 0;   // Value of the number read so far

  // Loop until a non-digit character is received
  while(1) {
    c = fgetc(fp);      // Assume that fp is global and is already initialized



    if(c >= '0' && c <= '9') {



      val = val * 10 + c - '0';



    }



    else{

      return(val);

    };

  };

};
```

(b) (10 pts) Briefly describe the role of the *output buffer* in serial communication.