AME 3623 Real-Time Embedded Systems
Final Exam
May 8, 2015

General instructions:

- Please wait to open this exam booklet until you are told to do so.
- This examination booklet has 13 pages. You also have been issued a bubble sheet.
- Write your name, university ID number and date below, and sign where indicated. Also, write your name and ID number on your bubble sheet, and fill in the bubbles for your ID. B C
- The exam is closed book, notes and electronic devices. The exception is that you may have one page of personal notes (double sided).
- The exam is worth a total of 200 points (and 20% of your final grade).
- You have 2 hours to complete the exam. Be a smart test taker: if you get stuck on one problem go on to the next.
- Use your bubble sheet to answer all multiple-choice questions. Make sure that the question number and the bubble row number match when you are answering each question. A C B B C

On my honor, I affirm that I have neither given nor received inappropriate aid in the completion of this exam.

Signature: _____

Name: _____

ID Number: _____

Date: _____

Question	Points	Score
Binary Representations and Operators	25	
Circuits and Code	60	
Control	20	
Interrupt Service Routines and Timer/Counters	20	
Serial Processing	15	
Finite State Machines	60	
Total:	200	

Part I. Binary Representations and Operators

1. (5 points) What is the binary representation of a after the following code is executed?

```
uint8_t a = 0x38;
```

A. 0010 0100 B. 0011 1000 C. 0010 1000 D. 0011 0100
E. Answer not shown

2. (5 points) What is the hexadecimal representation of b after the following code is executed?

```
uint8_t a = 0x3F;
uint8_t b = a + 20;
```

A. 0x43 B. 0x4F C. 0x53 D. 0x5F E. Answer not shown

3. (5 points) What is the binary representation for -0x22? Assume a signed, 8-bit integer.
A. 0001 0110 B. 0010 0010 C. 1101 1110 D. 1110 1010
E. Answer not shown

4. (5 points) What is the decimal representation of b after the following code is executed?

```
uint8_t a = 8;
uint8_t b = 20 * (a/5);
```

A. 0 B. 22 C. 32 D. 160 E. Answer not shown

5. (5 points) What is the hexadecimal representation of c after the following code is executed?

```
uint8_t a = 0xA5;
uint8_t b = 0xC3;
uint8_t c = (a >> 4) + b;
```

A. 0x68 B. 0xCD C. 0xD7 D. 0x168 E. Answer not shown

Part II. Circuits and Code

Consider the following circuit:

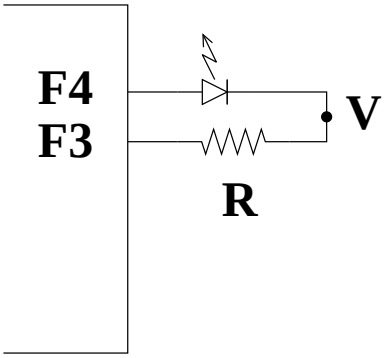


```
1  int main (void)
2  {
3    DDRF = ****;  // Initialized correctly
4    PORTF = 0;
5    uint8_t counter = 0;
6
7    while(1) {
8      PORTF = (PORTF & 0xE7) | (counter & 0x3) << 3;
9      ++counter;
10     delay_ms(100);
11   }
12 }
```

Assume $R = 300\Omega$, $V_f = 2V$ and the maximum voltage output from a microprocessor pin is $5V$.

6. (5 points) What is the correct initialization for $DDRF$?
   A. $0x0$ B. $0x18$ C. $0x30$ D. $0xFF$ E. Answer not shown

7. (5 points) When $counter = 2$ on line 8, what is V?
   A. $0V$ B. $2V$ C. $3V$ D. $5V$ E. Answer not shown

8. (5 points) When $counter = 7$ on line 8, what is I_D?
   A. 0 mA B. 6.667 mA C. 10 mA D. 16.667 mA E. Answer not shown

9. (5 points) What is the duty cycle of the LED flash?
   A. 0% B. 25% C. 50% D. 100% E. Answer not shown

Consider the following circuit:

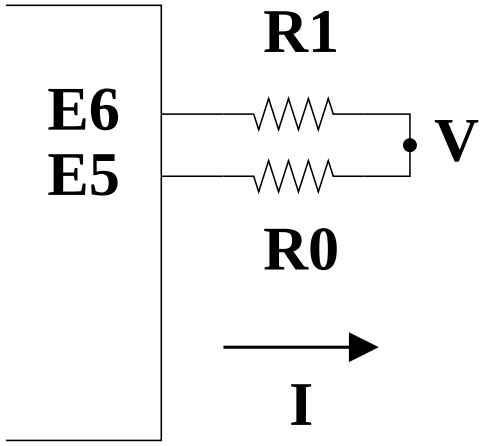

Assume $R_0 = 200\Omega$, $R_1 = 100\Omega$ and the maximum voltage output from a microprocessor pin is $5V$.

10. (5 points) What is the correct initialization for $DDRE$?
    A. $0x0$ B. $0x30$ C. $0x60$ D. $0xC0$ E. Answer not shown

11. (5 points) If $PORTE = 0x42$, what is V?
    A. 0 V B. 10/255 V C. 10/15 V D. 10/3 V E. Answer not shown

12. (5 points) If $PORTE = 0x7F$, what is V?
    A. 0 V B. 10/255 V C. 10/3 V D. 5 V E. Answer not shown

13. (5 points) For what value of $PORTE$ is $V = 0V$?
    A. $0x1B$ B. $0x38$ C. $0x62$ D. $0xC7$ E. Answer not shown

Consider the following circuit and program:

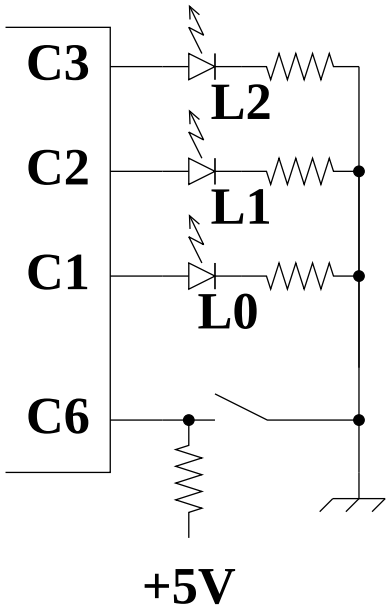


```
1   int main (void)
2   {
3     DDRC = ******;
4     PORTC = 0;
5     uint8_t counter = 0;
6
7     while(1) {
8       if(******) {
9         ++counter;
10      }
11      ******
12      delay_ms(*****);
13    }
14  }
```

The program is to count in binary (using $L2$, $L1$ and $L0$) at a rate of one count per second if the switch is pressed (closed). If the switch is not pressed, then the program should freeze the count.

14. (5 points) What is the correct initialization for $DDRC$ (line 3)?

    A. $0x0$ B. $0x7$ C. $0xE$ D. $0xF$ E. Answer not shown

15. (5 points) What is the correct condition for line 8?

    A. $PORTC$ & $0x40$ B. !($PORTC$ & $0x40$)
    C. $PORTC$ & $0x20$ D. !($PORTC$ & $0x20$)
    E. Answer not shown

16. (5 points) What is the correct update for the LEDs on line 11?

    A. $PORTC = PORTC \,\&\, 0xF1 \mid (counter \,\&\, 0x7) << 1$
    B. $PORTC = PORTC \,\&\, 0xF8 \mid (counter \,\&\, 0x7) << 1$
    C. $PORTC = PORTC \,\&\, 0xF1 \mid (counter \,\&\, 0x7) << 2$
    D. $PORTC = PORTC \,\&\, 0xF8 \mid (counter \,\&\, 0x7) << 2$
    E. Answer not shown

17. (5 points) What is the correct delay for line 12?

    A. 250 B. 500 C. 1000 D. 2000 E. Answer not shown

Part III. Control

Consider the following P-D control law:

$\tau = K_p(\theta - \theta_d) + K_v\dot{\theta}$

Assume that positive orientation and torque both refer to the same direction.

18. (5 points) In order to achieve critical damping, what is the sign of K_p?
    A. $K_p > 0$ B. $K_p < 0$

19. (5 points) In order to achieve critical damping, what is the sign of K_v?
    A. $K_v > 0$ B. $K_v < 0$

20. (5 points) Suppose that a linear plant (an object being controlled) is exhibiting an underdamped behavior. How could you change the control parameters to address this problem? (note that sign matters here)
    A. Decrease K_p or decrease K_v B. Decrease K_p or increase K_v
    C. Increase K_p or decrease K_v D. Increase K_p or increase K_v
    E. Answer not shown

21. (5 points) Assume $K_p = 0$. If one made the incorrect choice of sign for K_v, what would happen?
    A. $|\dot{\theta}|$ would increase B. $|\dot{\theta}|$ would stay the same C. $|\dot{\theta}|$ would decrease
    D. Answer not shown

Part IV. Interrupt Service Routines and Timer/Counters

Carefully consider the following circuit and code:

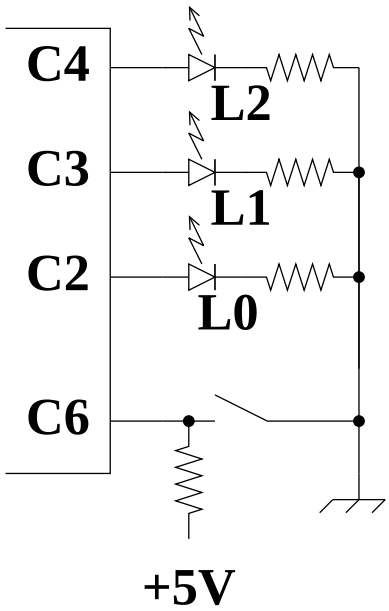


```
volatile uint8_t x;

ISR(TIMER1_OVF_vect) {
  static uint32_t counter = 0;

  if(counter % x == 0) {
    PORTC ^= 0x8;
  }

  counter++;
}

int main(void) {
  DDRC = 0x1C;
  PORTC = 0;

  x = 5;

  timer1_config(TIMER2_PRE_256);
  timer1_enable();
  sei();

  while(1) {
  }
}
```

22. (5 points) At what frequency are the interrupts being generated?
A. $\frac{16{,}000{,}000}{256^1}$ B. $\frac{16{,}000{,}000}{256^2}$ C. $\frac{16{,}000{,}000}{256^3}$ D. $\frac{16{,}000{,}000}{1024\times256}$
E. Answer not shown

23. (5 points) At what duty cycle is $L1$ flashing?
A. 0% B. 25% C. 50% D. 100% E. Answer not shown

24. (5 points) At what frequency is $L1$ flashing?
A. $\frac{1{,}600{,}000}{256^3}$ B. $\frac{3{,}200{,}000}{256^2}$ C. $\frac{3{,}200{,}000}{256^3}$ D. $\frac{16{,}000{,}000}{256^3}$ E. Answer not shown

25. (5 points) At what frequency is $L2$ flashing?
A. $\frac{1{,}600{,}000}{256^3}$ B. $\frac{3{,}200{,}000}{256^2}$ C. $\frac{3{,}200{,}000}{256^3}$ D. $\frac{16{,}000{,}000}{256^3}$ E. Answer not shown

Part V. Serial Processing

26. (15 points) Fill in the implementation of the following function that reads characters until a digit is found ([0...9]). Once found, the value of the digit is returned.

```
int8_t getdec(FILE *fp) {

}
```

Part VI. Finite State Machines

27. (20 points) International Morse Code encodes characters using tones that are short ("dit" or ".") and long ("dah" or "-"). Design a finite state machine that recognizes the letters **v** (...-) and **r** (.-.) in a long sequence of tones. All other patterns must be ignored.

The events are:

- .
- -

The actions are:

- V
- R
- z (no action)

A letter should be output as soon as it is recognized. Each state should address all possible events.

Examples:

```
.-...-        Takes action R after the 3rd character and V after the last one

.....-.       Takes action V as soon as - is received.

.--.-.        Takes action R after the last character
```

28. (20 points) Solar roadways embed solar panels, computing, sensors and controllable lighting into the roadway. You are to design a finite state machine controller that is responsible for configuring the lighting in the roadway depending on the conditions of the road and a command signal from a higher-level controller. The details are as follows:

- The roadway is a 2-lane road.
- Each lane can display one of three glyphs: north ($\uparrow$), south ($\downarrow$) and closed (X).
- The displayed glyphs can only be changed if no cars are present.
- If both lanes are open, then traffic will travel in the right late (relative to the car).
- If only one lane is open, then traffic will alternate in this lane between the two flow directions once per minute, subject to the above constraints.
- Lanes are closed/opened based on a signal from a central controller. At least one lane will always be open.

The events are:

- No car (NC)
- Close left (CL)
- Open left (OL)
- Close right (CR)
- Open right (OR)
- Timer $\geq$ 1 minute (TO)

The actions are:

- Left $\uparrow$ (L$\uparrow$)
- Left $\downarrow$ (L$\downarrow$)
- Left no traffic (LX)
- Right $\uparrow$ (R$\uparrow$)
- Right $\downarrow$ (R$\downarrow$)
- Right no traffic (RX)
- Reset timer (Reset)

Given the following states, fill in the transitions (with event, action pairs). You do not need to include transitions that loop back to the same state.

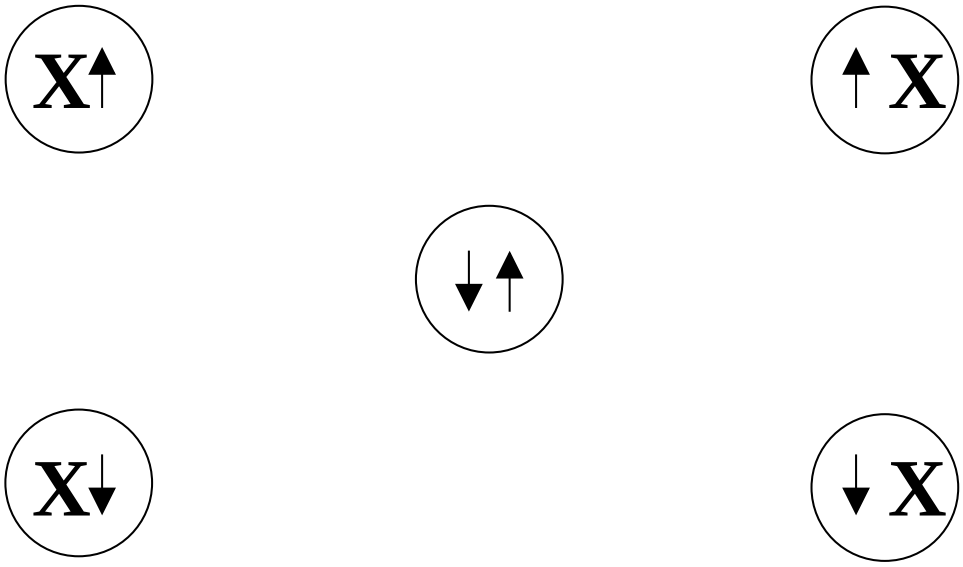

29. (20 points) Design a finite state machine controller for an alarm clock. The clock must exhibit the following behavior:

- The clock will only sound if the alarm is turned on.
- If turned on, the alarm will sound at a fixed time every day.
- If the alarm is sounding, hitting the snooze bar will stop the sounding for 5 minutes. After that time, it will begin sounding again.

The events are:

- Alarm Time Arrived (ATA)
- Snooze Hit (SH)
- Alarm On (AOn)
- Alarm Off (AOff)
- Timer $\geq$ 5 minutes (TO)

The actions are:

- Sound Off (SOff)
- Sound On (SOn)
- Reset Timer (Reset)
- None (z)

Using these action and event sets, draw the finite state machine that will exhibit the described behavior.